EVVOSEMI®

THINK CHANGE DO

ESD TVS MOS LDO Diode Sensor DC-DC

Product Specification

Domestic Part Number	LM2596/LM2596HV
Overseas Part Number	LM2596/LM2596HV
Equivalent Part Number	LM2596/LM2596HV

3A Step-Down Voltage Regulator

General Description

The LM2596 /LM2596HV series of regulators are monolithic integrated circuits that provide all the active functions for a step-down (buck) switching regulator, capable of driving a 3A load with excellent line and load regulation. These devices are available in fixed output voltages of 3.3V, 5V, 12V, and an adjustable output version.

Requiring a minimum number of external components, these regulators are simple to use and include internal frequency compensation†, and a fixed-frequency oscillator.

The LM2596 /LM2596HV series operates at a switching frequency of150 kHz thus allowing smaller sized filter components than what would be needed with lower frequency switching regulators. Available in a standard 5-lead TO-220 package with several different lead bend options, and a 5-lesd TO-262 surface mount package.

A standard series of inductors are available from several different manufacturers optimized for use with the LM2596 series. This feature greatly simplifies the design of switch-mode power supplies.

Other features include a guaranteed ±4% tolerance on output voltage under specified input voltage and output load conditions, and ±15% on the oscillator frequency. External shutdown is included, featuring typically 80 µA standby current. Self protection features include a two stage frequency reducing current limit for the output switch and an over temperature shutdown for complete protection under fault conditions.

Features

- 3.3V, 5V, 12V, and adjustable output versions
- Adjustable version output voltage range, 1.2V to 37V (57V for HV version) ±4% max over line and load conditions
- Available in TO-220 and TO-263,TO-220B packages
- Guaranteed 3A output load current
- Input voltage range up to 40V
- Requires only 4 external components
- Excellent line and load regulation specifications
- 150 kHz fixed frequency internal oscillator
- TTL shutdown capability
- Low power standby mode, I_Q typically 80 µA
- High efficiency
- Uses readily available standard inductors
- Thermal shutdown and current limit protection

Applications

- Simple high-efficiency step-down (buck) regulator
- On-card switching regulators
- Positive to negative converter

Note: †Patent Number 5,382,918.

Typical Application (Fixed Output Voltage Versions)

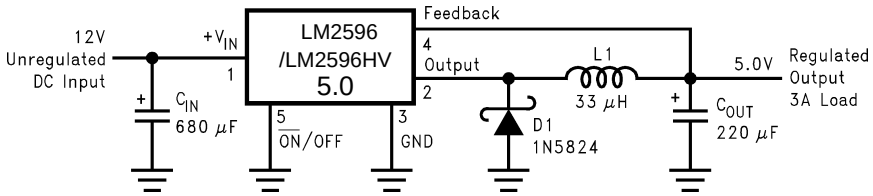

Package Types

TO220B-5L

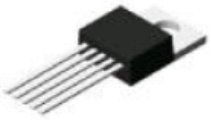

TO220-5L

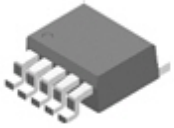

TO263-5L

Pin Assignments

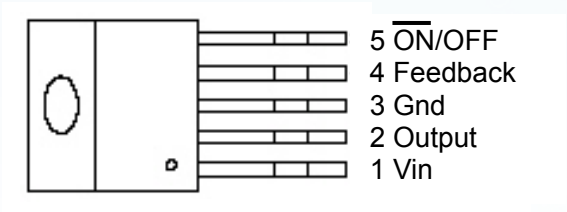

TO220B-5L/TO220-5L

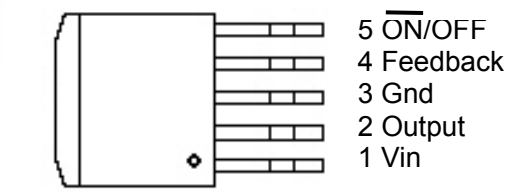

TO263-5L

Pin Descriptions

Name	Description
Vin	Input supply voltage
Output	Switching output
Gnd	Ground
Feedback	Output voltage feedback
ON/OFF	ON/OFF shutdown Active is “Low” or floating

Ordering information

Temperature Range	Output Voltage, V				Package Type
	3.3	5.0	12	ADJ	
-40°C ≤ T_A ≤ 125°C	LM2596HVS-3.3	LM2596HVS -5.0	LM2596HVS-12	LM2596HVS-ADJ	TO-263
	LM2596S-3.3	LM2596S-5.0	LM2596S -12	LM2596S-ADJ	
	LM2596HVT -3.3	LM2596HVT -5.0	LM2596HVT -12	LM2596HVT-ADJ	TO-220
	LM2596T-3.3	LM2596T-5.0	LM2596T -12	LM2596T-ADJ	

Absolute Maximum Ratings

Maximum Supply Voltage

LM2596	45V
LM2596HV	57V
ON /OFF Pin Input Voltage	−0.3 ≤ V ≤ +25V
Feedback Pin Voltage	−0.3 ≤ V ≤+25V
Output Voltage to Ground (Steady State)	−1V
Power Dissipation	Internally limited
StorageTemperatureRange	−65˚Cto+150˚C
ESD Susceptibility HumanBodyModel	2kV

Lead Temperature	
S Package	
Vapor Phase (60 sec.)	+215˚C
Infrared (10 sec.)	+245˚C
T Package (Soldering, 10 sec.)	+260˚C
Maximum Junction Temperature	+150˚C

Operating Conditions

Temperature Range	−40˚C ≤ T_J ≤ +125˚C
Supply Voltage	
LM2596	40V
LM2596HV	57V

Electrical Characteristics LM2596-3.3, LM2596HV-3.3

Specifications with standard type face are for T_J = 25˚C, and those with **boldface type** apply over **full Operating Temperature Range**

Symbol	Parameter	Conditions	LM2596 -3.3-EV LM2596HV -3.3-EV		Units (Limits)
			Typ	Limit	
SYSTEM PARAMETERS (Note 5) Test Circuit *Figure 1*					
V_{OUT}	Output Voltage	4.75V ≤ V_{IN} ≤ 40V, 0.2A ≤ I_{LOAD} ≤ 3A	3.3		V
				3.168/**3.135**	V(min)
				3.432/**3.465**	V(max)
η	Efficiency	V_{IN} = 12V, I_{LOAD} = 3A	73		%

Electrical Characteristics LM2596-5.0,LM2596HV-5.0

Specifications with standard type face are for T_J = 25˚C, and those with **boldface type** apply over **full Operating Temperature Range**

Symbol	Parameter	Conditions	LM2596 -5.0-EV LM2596HV -5.0-EV		Units (Limits)
			Typ	Limit	
SYSTEM PARAMETERS (Note 5) Test Circuit *Figure 1*					
V_{OUT}	Output Voltage	7V ≤ V_{IN} ≤ 40V, 0.2A ≤ I_{LOAD} ≤ 3A	5.0		V
				4.800/**4.750**	V(min)
				5.200/**5.250**	V(max)
η	Efficiency	V_{IN} = 12V, I_{LOAD} = 3A	80		%

Electrical Characteristics LM2596-12,LM2596HV-12

Specifications with standard type face are for T_J = 25˚C, and those with **boldface type** apply over **full Operating Temperature Range**

Symbol	Parameter	Conditions	LM2596 -12-EV LM2596HV -12-EV		Units (Limits)
			Typ	Limit	
SYSTEM PARAMETERS (Note 5) Test Circuit *Figure 1*					
V_{OUT}	Output Voltage	15V ≤ V_{IN} ≤ 40V, 0.2A ≤ I_{LOAD} ≤ 3A	12.0		V
				11.52/**11.40**	V(min)
				12.48/**12.60**	V(max)
η	Efficiency	V_{IN} = 25V, I_{LOAD} = 3A	90		%

Electrical Characteristics LM2596-ADJ,LM2596HV-ADJ

Specifications with standard type face are for T_J = 25˚C, and those with **boldface type** apply over **full Operating Temperature Range**

Symbol	Parameter	Conditions	LM2596 -ADJ-EV LM2596HV -ADJ-EV		Units (Limits)
			Typ	Limit	
SYSTEM PARAMETERS (Note 5) Test Circuit *Figure 1*					
V_{FB}	Feedback Voltage	4.5V ≤ V_{IN} ≤ 40V, 0.2A ≤ I_{LOAD} ≤ 3A V_{OUT} programmed for 3V. Circuit of *Figure 1*	1.230	 1.193/**1.180** 1.267/**1.280**	V V(min) V(max)
η	Efficiency	V_{IN} = 12V, V_{OUT} = 3V, I_{LOAD} = 3A	73		%

All Output Voltage Versions Electrical Characteristics

Specifications with standard type face are for T_J = 25˚C, and those with **boldface type** apply over **full Operating Temperature Range**. Unless otherwise specified, V_{IN} = 12V for the 3.3V, 5V, and Adjustable version and V_{IN} = 24V for the 12V version. I_{LOAD} = 500 mA

Symbol	Parameter	Conditions	LM2596-XX LM2596HV-XX		Units (Limits)
			Typ	Limit	
DEVICE PARAMETERS					
I_b	Feedback Bias Current	Adjustable Version Only, V_{FB} = 1.3V	10	 50/**100**	nA nA (max)
f_O	Oscillator Frequency	(Note 6)	150	 127/**110** 173/**173**	kHz kHz(min) kHz(max)
V_{SAT}	Saturation Voltage	I_{OUT} = 3A (Notes 7, 8)	1.16	 1.4/**1.5**	V V(max)
DC	Max Duty Cycle (ON) Min Duty Cycle (OFF)	(Note 8) (Note 9)	100 0		%
I_{CL}	Current Limit	Peak Current (Notes 7, 8)	4.5	 3.6/**3.4** 6.9/**7.5**	A A(min) A(max)
I_L	Output Leakage Current	Output = 0V (Notes 7, 9)		50	µA(max)
		Output = −1V (Note 10)	2	 30	mA mA(max)
I_Q	Quiescent Current	(Note 9)	5	 10	mA mA(max)
I_{STBY}	Standby Quiescent Current	ON/OFF pin = 5V (OFF) (Note 10)	80	 200/**250**	µA µA(max)
θ_{JC} θ_{JA} θ_{JA} θ_{JA} θ_{JA}	Thermal Resistance	TO-220 or TO-263 Package, Junction to Case TO-220 Package, Junction to Ambient (Note 11) TO-263 Package, Junction to Ambient (Note 12) TO-263 Package, Junction to Ambient (Note 13) TO-263 Package, Junction to Ambient (Note 14)	2 50 50 30 20		˚C/W ˚C/W ˚C/W ˚C/W ˚C/W
ON/OFF CONTROL Test Circuit *Figure 1*					
V_{IH} V_{IL}	$\overline{ON}$ /OFF Pin Logic Input Threshold Voltage	Low (Regulator ON) High (Regulator OFF)	1.3	 **0.6** **2.0**	V V(max) V(min)

All Output Voltage Versions

Electrical Characteristics (Continued)

Specifications with standard type face are for T_J = 25˚C, and those with **boldface type** apply over **full Operating Temperature Range**. Unless otherwise specified, V_{IN} = 12V for the 3.3V, 5V, and Adjustable version and V_{IN} = 24V for the 12V version. I_{LOAD} = 500 mA

Symbol	Parameter	Conditions	LM2596-XX LM2596HV-XX		Units (Limits)
			Typ	Limit	
I_H	$\overline{ON}$ /OFF Pin Input Current	V_{LOGIC} = 2.5V (Regulator OFF)	5		µA
				15	µA(max)
I_L		V_{LOGIC} = 0.5V (Regulator ON)	0.02		µA
				5	µA(max)

Note 1: Absolute Maximum Ratings indicate limits beyond which damage to the device may occur. Operating Ratings indicate conditions for which the device is intended to be functional, but do not guarantee specific performance limits. For guaranteed specifications and test conditions, see the Electrical Characteristics.

Note 2: The human body model is a 100 pF capacitor discharged through a 1.5k resistor into each pin.

Note 3: Typical numbers are at 25˚C and represent the most likely norm.

Note 4: All limits guaranteed at room temperature (standard type face) and at temperature extremes (bold type face). All room temperature limits are 100% production tested. All limits at temperature extremes are guaranteed via correlation using standard Statistical Quality Control (SQC) methods. All limits are used to calculate Average Outgoing Quality Level (AOQL).

Note 5: External components such as the catch diode, inductor, input and output capacitors, and voltage programming resistors can affect switching regulator system performance. When the LM2596 is used as shown in the *Figure 1* test circuit, system performance will be as shown in system parameters section of Electrical Characteristics.

Note 6: The switching frequency is reduced when the second stage current limit is activated.

Note 7: No diode, inductor or capacitor connected to output pin.

Note 8: Feedback pin removed from output and connected to 0V to force the output transistor switch ON.

Note 9: Feedback pin removed from output and connected to 12V for the 3.3V, 5V, and the ADJ. version, and 15V for the 12V version, to force the output transistor switch OFF.

Note 10: V_{IN} = 40V.

Note 11: Junction to ambient thermal resistance (no external heat sink) for the TO-220 package mounted vertically, with the leads soldered to a printed circuit board with (1 oz.) copper area of approximately 1 in^2.

Note 12: Junction to ambient thermal resistance with the TO-263 package tab soldered to a single printed circuit board with 0.5 in^2 of (1 oz.) copper area.

Note 13: Junction to ambient thermal resistance with the TO-263 package tab soldered to a single sided printed circuit board with 2.5 in^2 of (1 oz.) copper area.

Note 14: Junction to ambient thermal resistance with the TO-263 package tab soldered to a double sided printed circuit board with 3 in^2 of (1 oz.) copper area on the LM2596S side of the board, and approximately 16 in^2 of copper on the other side of the p-c board. See Application Information in this data sheet and the thermal model in Switchers Made Simple™ version 4.3 software.

Typical Performance Characteristics (Circuit of *Figure 1*)

Normalized Output Voltage

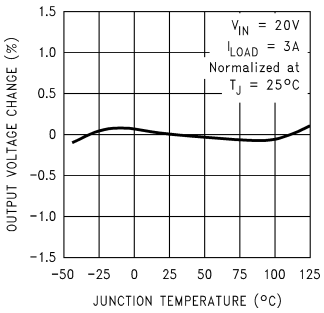

Line Regulation

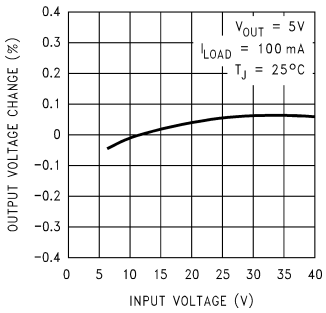

Efficiency

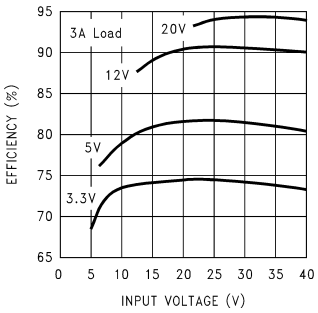

Typical Performance Characteristics (Circuit of *Figure 1*) (Continued)

Switch Saturation Voltage

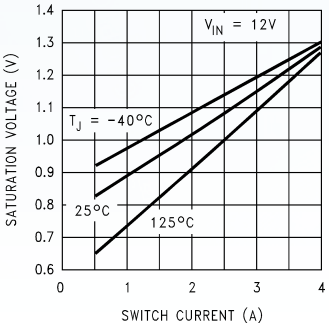

Switch Current Limit

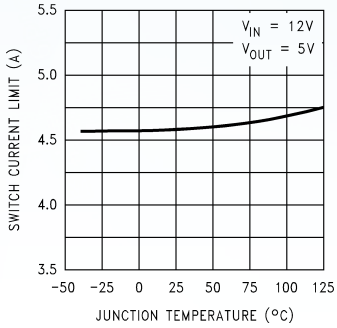

Dropout Voltage

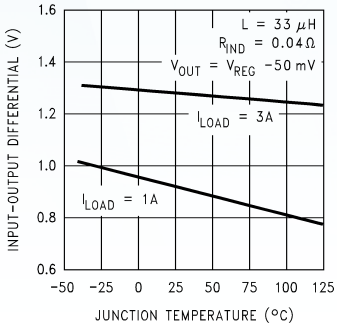

Operating Quiescent Current

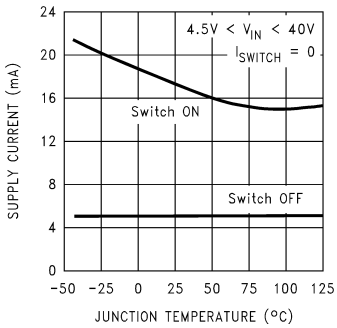

Shutdown Quiescent Current

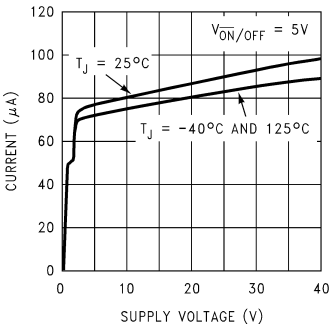

Minimum Operating Supply Voltage

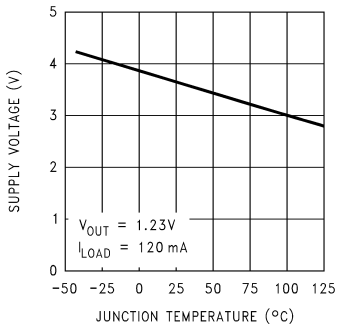

$\overline{ON}$ /OFF Threshold Voltage

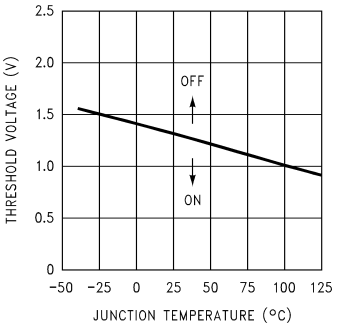

$\overline{ON}$ /OFF Pin Current (Sinking)

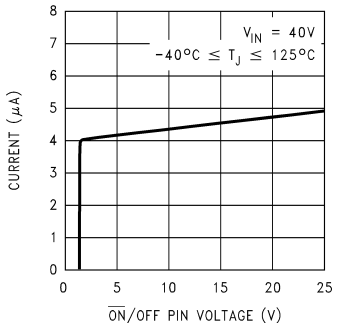

Switching Frequency

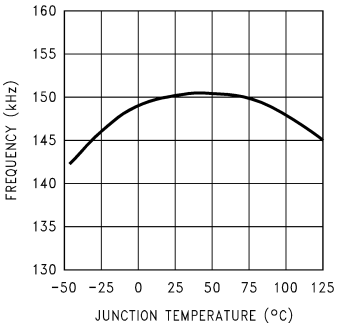

LM2596/LM2596HV SeriesBuckRegulatorDesignProcedure(FixedOutput)(Continued)

Conditions			Inductor		Output Capacitor			
					Through Hole Electrolytic		Surface Mount Tantalum	
Output Voltage (V)	Load Current (A)	Max Input Voltage (V)	Inductance (μH)	Inductor (#)	Panasonic HFQ Series (μF/V)	Nichicon PL Series (μF/V)	AVX TPS Series (μF/V)	Sprague 595D Series (μF/V)
3.3	3	5	22	L41	470/25	560/16	330/6.3	390/6.3
		7	22	L41	560/35	560/35	330/6.3	390/6.3
		10	22	L41	680/35	680/35	330/6.3	390/6.3
		40	33	L40	560/35	470/35	330/6.3	390/6.3
	2	6	22	L33	470/25	470/35	330/6.3	390/6.3
		10	33	L32	330/35	330/35	330/6.3	390/6.3
		40	47	L39	330/35	270/50	220/10	330/10
5	3	8	22	L41	470/25	560/16	220/10	330/10
		10	22	L41	560/25	560/25	220/10	330/10
		15	33	L40	330/35	330/35	220/10	330/10
		40	47	L39	330/35	270/35	220/10	330/10
	2	9	22	L33	470/25	560/16	220/10	330/10
		20	68	L38	180/35	180/35	100/10	270/10
		40	68	L38	180/35	180/35	100/10	270/10
12	3	15	22	L41	470/25	470/25	100/16	180/16
		18	33	L40	330/25	330/25	100/16	180/16
		30	68	L44	180/25	180/25	100/16	120/20
		40	68	L44	180/35	180/35	100/16	120/20
	2	15	33	L32	330/25	330/25	100/16	180/16
		20	68	L38	180/25	180/25	100/16	120/20
		40	150	L42	82/25	82/25	68/20	68/25

FIGURE 2. LM2596 Fixed Voltage Quick Design Component Selection Table

LM2596/LM2596HV SeriesBuckRegulatorDesignProcedure(AdjustableOutput)

Output Voltage (V)	Through Hole Output Capacitor			Surface Mount Output Capacitor		
	Panasonic HFQ Series (μF/V)	Nichicon PL Series (μF/V)	Feedforward Capacitor	AVX TPS Series (μF/V)	Sprague 595D Series (μF/V)	Feedforward Capacitor
2	820/35	820/35	33 nF	330/6.3	470/4	33 nF
4	560/35	470/35	10 nF	330/6.3	390/6.3	10 nF
6	470/25	470/25	3.3 nF	220/10	330/10	3.3 nF
9	330/25	330/25	1.5 nF	100/16	180/16	1.5 nF
1 2	330/25	330/25	1 nF	100/16	180/16	1 nF
1 5	220/35	220/35	680 pF	68/20	120/20	680 pF
2 4	220/35	150/35	560 pF	33/25	33/25	220 pF
2 8	100/50	100/50	390 pF	10/35	15/50	220 pF

FIGURE 3. Output Capacitor and Feedforward Capacitor Selection Table

LM2596/LM2596HV SeriesBuckRegulatorDesignProcedure

INDUCTOR VALUE SELECTION GUIDES (For Continuous Mode Operation)

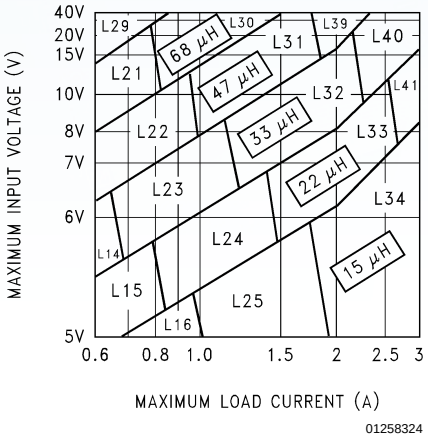

FIGURE4.LM2596/LM2596HV-3.3

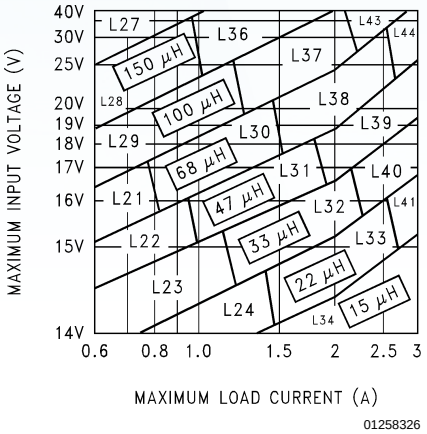

FIGURE6.LM2596/LM2596HV-12

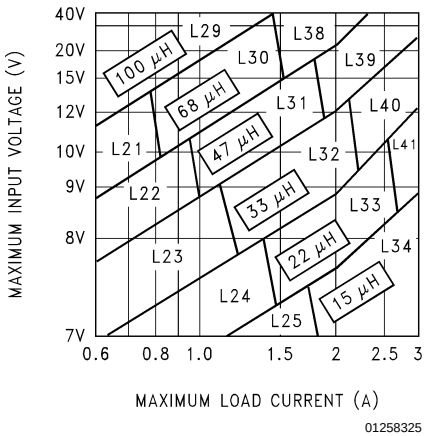

FIGURE5.LM2596/LM2596HV-5.0

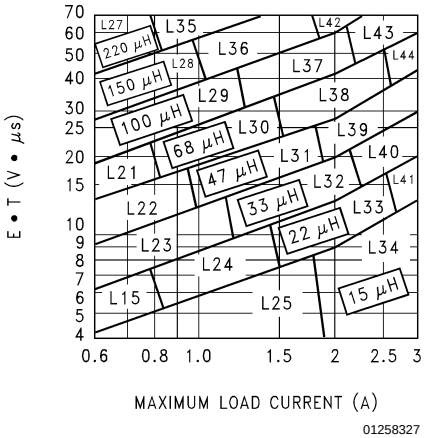

FIGURE7.LM2596/LM2596HV-ADJ

Test Circuit and Layout Guidelines (Continued)

Adjustable Output Voltage Versions

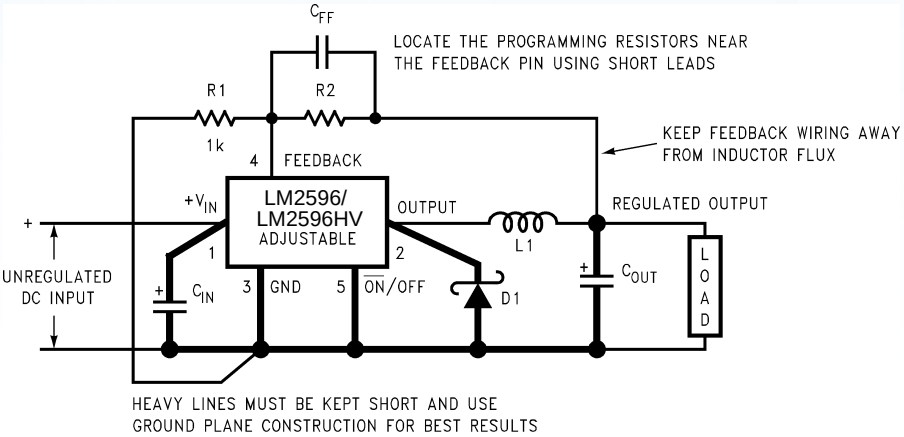

$$V_{OUT} = V_{REF}\left(1 + \frac{R_2}{R_1}\right)$$

where V_{REF} = 1.23V

$$R_2 = R_1\left(\frac{V_{OUT}}{V_{REF}} - 1\right)$$

Select R_1 to be approximately 1 kΩ, use a 1% resistor for best stability.

C_{IN} — 470 µF, 50V, Aluminum Electrolytic Nichicon "PL Series"

C_{OUT} — 220 µF, 35V Aluminum Electrolytic, Nichicon "PL Series"

D1 — 5A, 40V Schottky Rectifier, 1N5825

L1 — 68 µH, L38

R1 — 1 kΩ, 1%

C_{FF} — See Application Information Section

FIGURE 1. Standard Test Circuits and Layout Guides

As in any switching regulator, layout is very important. Rapidly switching currents associated with wiring inductance can generate voltage transients which can cause problems. For minimal inductance and ground loops, the wires indicated by **heavy lines should be wide printed circuit traces and should be kept as short as possible.** For best results, external components should be located as close to the switcher IC as possible using ground plane construction or single point grounding.

If **open core inductors are used,** special care must be taken as to the location and positioning of this type of inductor. Allowing the inductor flux to intersect sensitive feedback, IC groundpath and C_{OUT} wiring can cause problems.

When using the adjustable version, special care must be taken as to the location of the feedback resistors and the associated wiring. Physically locate both resistors near the IC, and route the wiring away from the inductor, especially an open core type of inductor. (See application section for more information.)

LM2596 /LM2596HV Series Buck Regulator Design Procedure (Adjustable Output)

PROCEDURE (Adjustable Output Voltage Version)	EXAMPLE (Adjustable Output Voltage Version)
Given: V_{OUT} = Regulated Output Voltage V_{IN}(max) = Maximum Input Voltage I_{LOAD}(max) = Maximum Load Current F = Switching Frequency *(Fixed at a nominal 150 kHz).*	**Given:** V_{OUT} = 20V V_{IN}(max) = 28V I_{LOAD}(max) = 3A F = Switching Frequency *(Fixed at a nominal 150 kHz).*
1. Programming Output Voltage (Selecting R_1 and R_2, as shown in *Figure 1*) Use the following formula to select the appropriate resistor values. $V_{OUT} = V_{REF}\left(1 + \frac{R_2}{R_1}\right)$ where $V_{REF} = 1.23V$ Select a value for R_1 between 240Ω and 1.5 kΩ. The lower resistor values minimize noise pickup in the sensitive feedback pin. (For the lowest temperature coefficient and the best stability with time, use 1% metal film resistors.) $R_2 = R_1\left(\frac{V_{OUT}}{V_{REF}} - 1\right)$	**1. Programming Output Voltage** (Selecting R_1 and R_2, as shown in *Figure 1*) Select R_1 to be 1 kΩ, 1%. Solve for R_2. $R_2 = R_1\left(\frac{V_{OUT}}{V_{REF}} - 1\right) = 1k\left(\frac{20V}{1.23V} - 1\right)$ R_2 = 1k (16.26 − 1) = 15.26k, closest 1% value is 15.4 kΩ. R_2 = 15.4 kΩ.
2. Inductor Selection (L1) **A.** Calculate the inductor Volt • microsecond constant E • T (V • µs), from the following formula: $E \bullet T = (V_{IN} - V_{OUT} - V_{SAT}) \bullet \frac{V_{OUT} + V_D}{V_{IN} - V_{SAT} + V_D} \bullet \frac{1000}{150\ kHz}\ (V \bullet \mu s)$ where V_{SAT} = internal switch saturation voltage = 1.16V and V_D = diode forward voltage drop = 0.5V **B.** Use the E • T value from the previous formula and match it with the E • T number on the vertical axis of the Inductor Value Selection Guide shown in *Figure 7*. **C.** on the horizontal axis, select the maximum load current. **D.** Identify the inductance region intersected by the E • T value and the Maximum Load Current value. Each region is identified by an inductance value and an inductor code (LXX). **E.** Select an appropriate inductor from the four manufacturer's part numbers listed in *Figure 8*.	**2. Inductor Selection (L1)** **A.** Calculate the inductor Volt • microsecond constant (E • T), $E \bullet T = (28 - 20 - 1.16) \bullet \frac{20 + 0.5}{28 - 1.16 + 0.5} \bullet \frac{1000}{150}\ (V \bullet \mu s)$ $E \bullet T = (6.84) \bullet \frac{20.5}{27.34} \bullet 6.67\ (V \bullet \mu s) = 34.2\ (V \bullet \mu s)$ **B.** E • T = 34.2 (V • µs) **C.** I_{LOAD}(max) = 3A **D.** From the inductor value selection guide shown in *Figure 7*, the inductance region intersected by the 34 (V • µs) horizontal L39. **E.** From the table in *Figure 8*, locate line L39, and select an bers.

Block Diagram

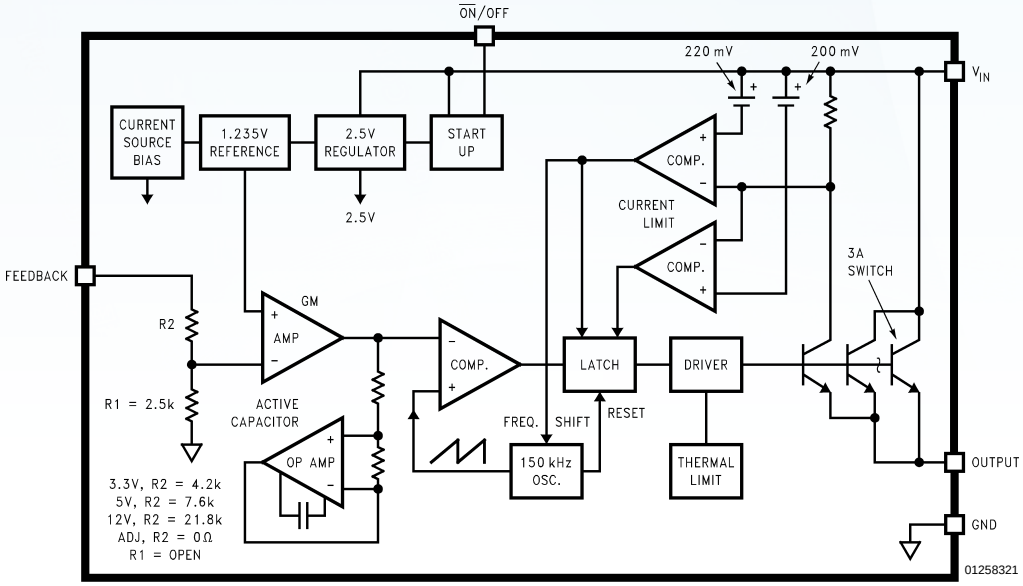

FIGURE 12.

Application Information

PIN FUNCTIONS

+V_{IN} — This is the positive input supply for the IC switching regulator. A suitable input bypass capacitor must be present at this pin to minimize voltage transients and to supply the switching currents needed by the regulator.

Ground — Circuit ground.

Output — Internal switch. The voltage at this pin switches between (+V_{IN} − V_{SAT}) and approximately −0.5V, with a duty cycle of approximately V_{OUT}/V_{IN}. To minimize coupling to sensitive circuitry, the PC board copper area connected to this pin should be kept to a minimum.

Feedback — Senses the regulated output voltage to complete the feedback loop.

$\overline{\text{ON}}$ /OFF — Allows the switching regulator circuit to be shut down using logic level signals thus dropping the total input supply current to approximately 80 µA. Pulling this pin below a threshold voltage of approximately 1.3V turns the regulator on, and pulling this pin above 1.3V (up to a maximum of 25V) shuts the regulator down. If this shutdown feature is not needed, the $\overline{\text{ON}}$ /OFF pin can be wired to the ground pin or it can be left open, in either case the regulator will be in the ON condition.

EXTERNAL COMPONENTS

INPUT CAPACITOR

C_{IN} — A low ESR aluminum or tantalum bypass capacitor is needed between the input pin and ground pin. It must be located near the regulator using short leads. This capacitor prevents large voltage transients from appearing at the input, and provides the instantaneous current needed each time the switch turns on.

The important parameters for the Input capacitor are the voltage rating and the RMS current rating. Because of the relatively high RMS currents flowing in a buck regulator's input capacitor, this capacitor should be chosen for its RMS current rating rather than its capacitance or voltage ratings, although the capacitance value and voltage rating are directly related to the RMS current rating.

The RMS current rating of a capacitor could be viewed as a capacitor's power rating. The RMS current flowing through the capacitors internal ESR produces power which causes the internal temperature of the capacitor to rise. The RMS current rating of a capacitor is determined by the amount of current required to raise the internal temperature approximately 10˚C above an ambient temperature of 105˚C. The ability of the capacitor to dissipate this heat to the surrounding air will determine the amount of current the capacitor can safely sustain. Capacitors that are physically large and have a large surface area will typically have higher RMS current ratings. For a given capacitor value, a higher voltage electrolytic capacitor will be physically larger than a lower voltage capacitor, and thus be able to dissipate more heat to the surrounding air, and therefore will have a higher RMS current rating.

Application Information (Continued)

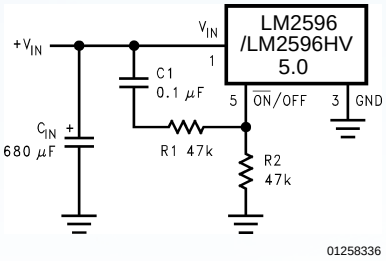

FIGURE 21. Delayed Startup

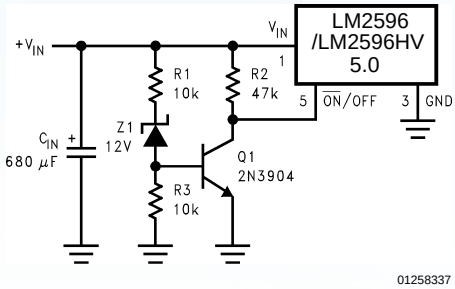

FIGURE 22. Undervoltage Lockout for Buck Regulator

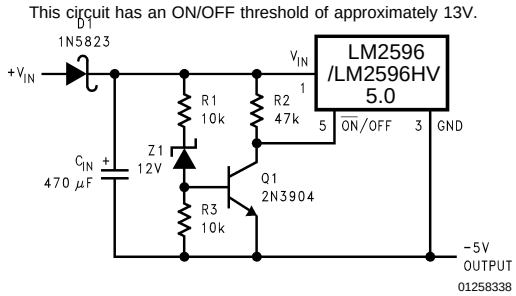

for Inverting Regulator

FIGURE 23. Undervoltage Lockout

DELAYED STARTUP

The circuit in *Figure 21* uses the the $\overline{ON}$ /OFF pin to provide a time delay between the time the input voltage is applied and the time the output voltage comes up (only the circuitry pertaining to the delayed start up is shown). As the input voltage rises, the charging of capacitor C1 pulls the $\overline{ON}$ /OFF pin high, keeping the regulator off. Once the input voltage reaches its final value and the capacitor stops charging, and resistor R_2 pulls the $\overline{ON}$ /OFF pin low, thus allowing the circuit to start switching. Resistor R_1 is included to limit the maximum voltage applied to the $\overline{ON}$ /OFF pin (maximum of 25V), reduces power supply noise sensitivity, and also limits the capacitor, C1, discharge current. When high input ripple voltage exists, avoid long delay time, because this ripple can be coupled into the $\overline{ON}$ /OFF pin and cause problems.

This delayed startup feature is useful in situations where the input power source is limited in the amount of current it can deliver. It allows the input voltage to rise to a higher voltage before the regulator starts operating. Buck regulators require less input current at higher input voltages.

UNDERVOLTAGE LOCKOUT

Some applications require the regulator to remain off until the input voltage reaches a predetermined voltage. An undervoltage lockout feature applied to a buck regulator is shown in *Figure 22*, while *Figure 23* and *24* applies the same feature to an inverting circuit. The circuit in *Figure 23* features a constant threshold voltage for turn on and turn off (zener voltage plus approximately one volt). If hysteresis is needed, the circuit in *Figure 24* has a turn ON voltage which is different than the turn OFF voltage. The amount of hysteresis is approximately equal to the value of the output voltage. If zener voltages greater than 25V are used, an additional 47 kΩ resistor is needed from the $\overline{ON}$ /OFF pin to the ground pin to stay within the 25V maximum limit of the $\overline{ON}$ /OFF pin.

INVERTING REGULATOR

The circuit in *Figure 25* converts a positive input voltage to a negative output voltage with a common ground. The circuit operates by bootstrapping the regulator's ground pin to the negative output voltage, then grounding the feedback pin,

This example uses the LM2596/LM2596HV-5.0 to generate a -5V output, but other output voltages are possible by selecting other output voltage versions, including the adjustable version. Since this regulator topology can produce an output voltage that is either greater than or less than the input voltage, the maximum output current greatly depends on both the input and output voltage. The curve shown in *Figure 26* provides a guide as to the amount of output load current possible for the different input and output voltage conditions.

Application Information (Continued)

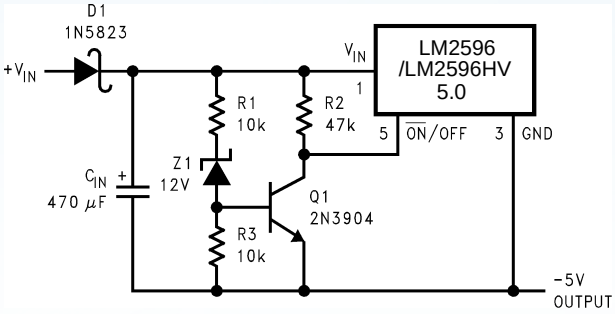

This circuit has hysteresis Regulator starts switching at V_{IN} = 13V Regulator stops switching at V_{IN} = 8V

FIGURE 24. Undervoltage Lockout with Hysteresis for Inverting Regulator

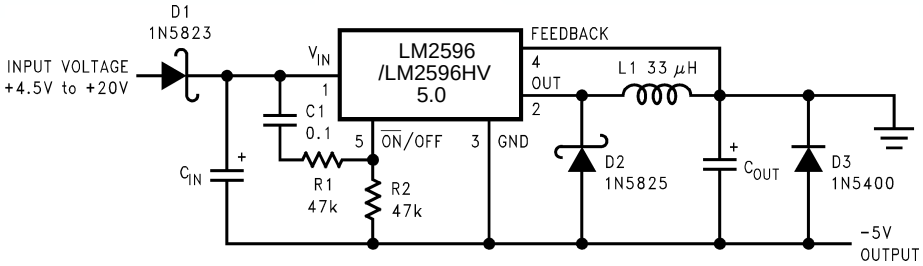

C_{IN} — 68 µF/25V Tant. Sprague 595D
470 µF/50V Elec. Panasonic HFQ
C_{OUT} — 47 µF/20V Tant. Sprague 595D
220 µF/25V Elec. Panasonic HFQ

FIGURE 25. Inverting −5V Regulator with Delayed Startup

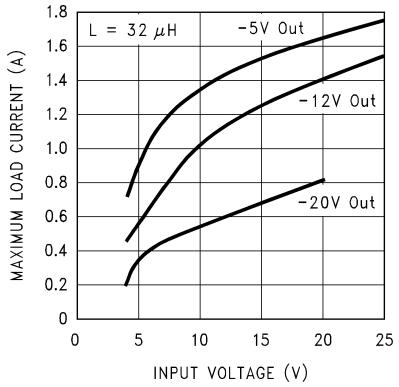

FIGURE 26. Inverting Regulator Typical Load Current

Because of differences in the operation of the inverting regulator, the standard design procedure is not used to select the inductor value. In the majority of designs, a 33 µH, 3.5A inductor is the best choice. Capacitor selection can also be narrowed down to just a few values. Using the values shown in *Figure 25* will provide good results in the majority of inverting designs.

This type of inverting regulator can require relatively large amounts of input current when starting up, even with light loads. Input currents as high as the LM2596 /LM2596HV current limit (approx 4.5A) are needed for at least 2 ms or more, until the output reaches its nominal output voltage.
The adual time depends on the output voltage and the size of the outputcapacitor. Input power sources that are current limited or sources that can not deliver these currents without getting loaded down, may not work correctly. Because of the relatively high startup currents required by the inverting tolology the delayed startup feature (C1, R_1 and R_2) shown the in *Figure 25* is recommended. By delaying the regulator startup, the input capacitor is allowed to charge up to a higher votage before the switcher begins operating. A portion of the high nput current needed for startup is now supplied by the input capacitor (C_{IN}). For severe start up conditions, the input capacitor can be made much larger than normal.

Application Information (Continued)

INVERTING REGULATOR SHUTDOWN METHODS

To use the $\overline{ON}$ /OFF pin in a standard buck configuration is simple, pull it below 1.3V (@25˚C, referenced to ground) to turn regulator ON, pull it above 1.3V to shut the regulator OFF. With the inverting configuration, some level shifting is required, because the ground pin of the regulator is no longer at ground, but is now setting at the negative output voltage level. Two different shutdown methods for inverting regulators are shown in *Figure 27* and *28.*

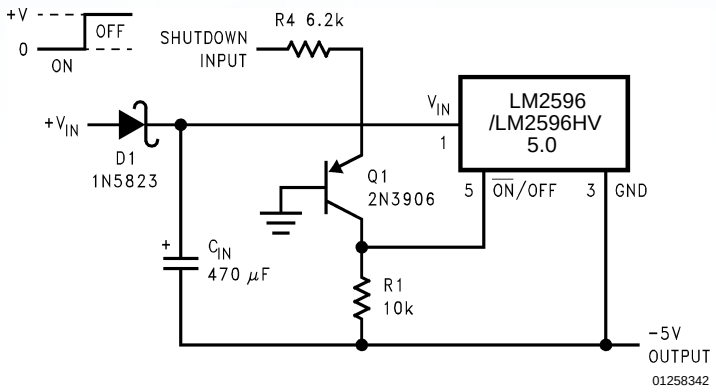

FIGURE 27. Inverting Regulator Ground Referenced Shutdown

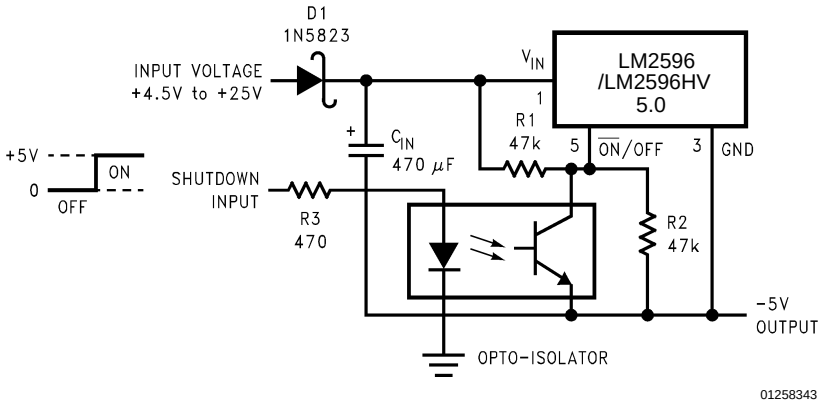

FIGURE 28. Inverting Regulator Ground Referenced Shutdown using Opto Device

PACKAGES DIMENSION : TO220B-5L

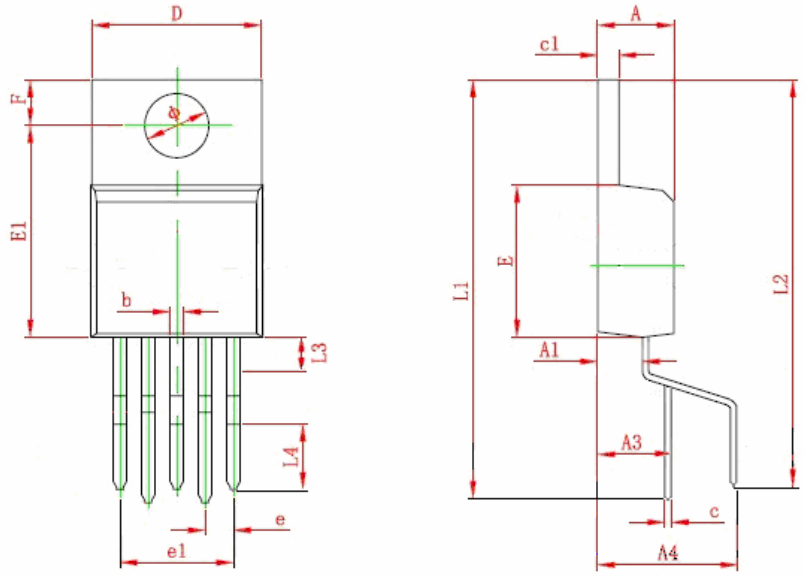

Symbol	Dimensions In Millimeters		Dimensions In Inches	
	Min	Max	Min	Max
A	4.470	4.670	0.176	0.184
A1	2.520	2.820	0.099	0.111
A3	4.450	4.850	0.175	0.191
A4	8.350	8.750	0.329	0.345
b	0.710	0.910	0.028	0.036
c	0.310	0.530	0.012	0.021
c1	1.170	1.370	0.046	0.054
D	10.010	10.310	0.394	0.406
E	8.900	9.300	0.350	0.366
E1	12.460	12.860	0.491	0.506
e	1.700TYP		0.220TYP	
e1	6.700	6.900	0.264	0.272
F	2.590	2.890	0.102	0.114
L1	26.800	27.400	1.055	1.079
L2	24.800	25.200	0.976	0.992
L3	1.000	2.000	0.039	0.079
L4	6.000	6.400	0.236	0.252
R	0.950	1.050	0.037	0.041
Φ	3.790	3.890	0.149	0.153

PACKAGES DIMENSION : TO220-5L

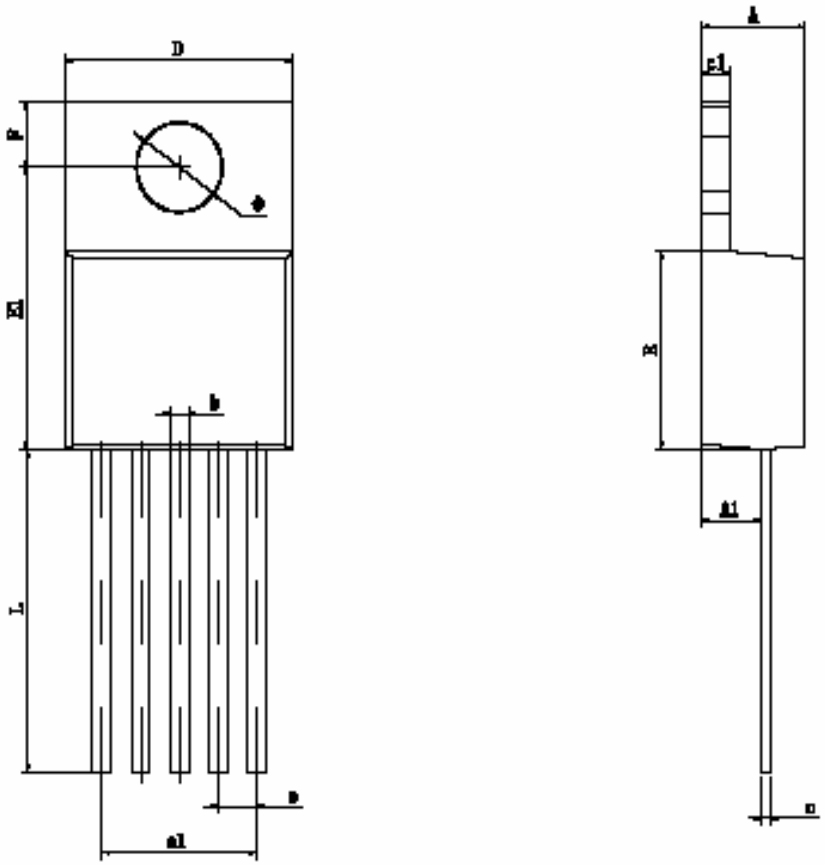

Symbol	Dimensions In Millimeters		Dimensions In Inches	
	Min	Max	Min	Max
A	4.470	4.670	0.176	0.184
A1	2.520	2.820	0.099	0.111
b	0.710	0.910	0.028	0.036
c	0.310	0.530	0.012	0.021
c1	1.170	1.370	0.046	0.054
D	9.850	10.150	0.388	0.400
E	8.200	8.600	0.323	0.339
E1	11.760	12.160	0.463	0.479
e	1.700TYP		0.067TYP	
e1	6.700	6.900	0.264	0.272
F	2.590	2.890	0.102	0.114
L	13.500	13.900	0.531	0.547
Φ	3.790	3.890	0.149	0.153

PACKAGES DIMENSION : TO263-5L

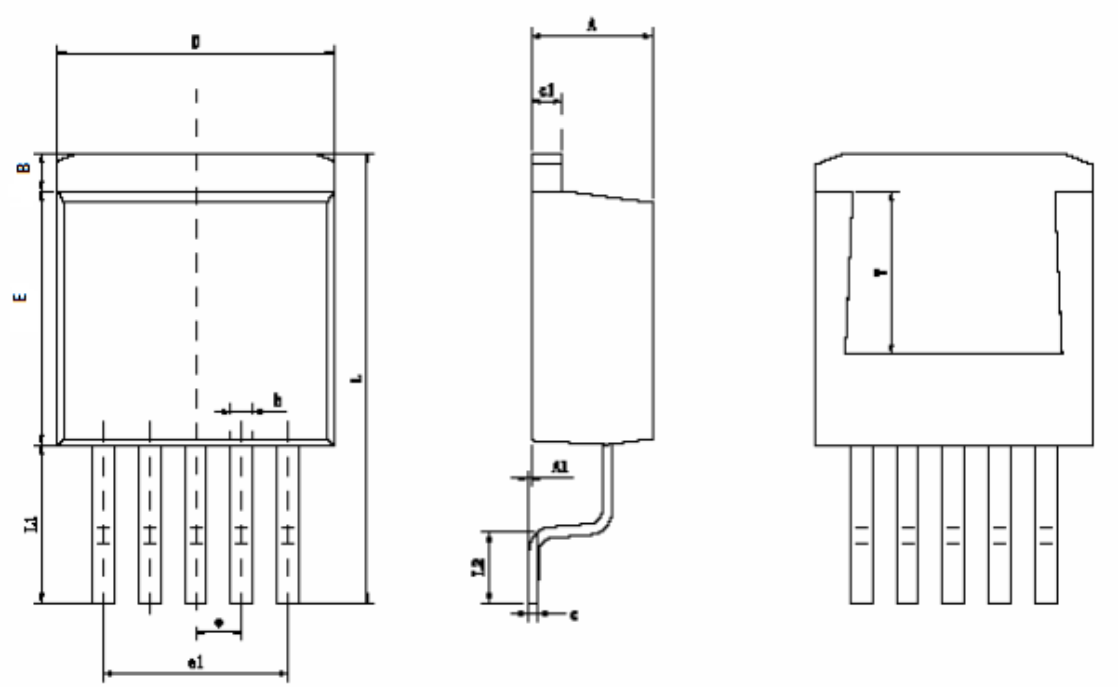

Symbol	Dimensions In Millimeters		Dimensions In Inches	
	Min	Max	Min	Max
A	4.470	4.670	0.176	0.184
A1	0.000	0.150	0.000	0.006
B	1.560	1.760	0.061	0.069
b	0.710	0.910	0.028	0.036
c	0.310	0.530	0.012	0.021
c1	1.170	1.370	0.046	0.054
D	9.880	10.180	0.389	0.401
E	8.200	8.600	0.323	0.339
e	1.700TYP		0.067TYP	
e1	6.700	6.900	0.264	0.272
L	15.140	15.540	0.596	0.612
L1	5.080	5.480	0.200	0.216
L2	2.340	2.740	0.092	0.108
V	5.600REF		0.220REF	

Disclaimer

EVVOSEMI ("EVVO") reserves the right to make corrections, enhancements, improvements, and other changes to its products and services at any time, and to discontinue any product or service without notice.

EVVO warrants the performance of its hardware products to the specifications applicable at the time of sale in accordance with its standard warranty. Testing and other quality control techniques are used as deemed necessary by EVVO to support this warranty. Except where mandated by government requirements, testing of all parameters of each product is not necessarily performed.

Customers should obtain and confirm the latest product information and specifications before final design, purchase, or use. EVVO makes no warranty, representation, or guarantee regarding the suitability of its products for any particular purpose, nor does EVVO assume any liability for application assistance or customer product design. EVVO does not warrant or accept any liability for products that are purchased or used for any unintended or unauthorized application.

EVVO products are not authorized for use as critical components in life support devices or systems without the express written approval of EVVOSEMI.

The EVVO logo and EVVOSEMI are trademarks of EVVOSEMI or its subsidiaries in relevant jurisdictions. EVVO reserves the right to make changes without further notice to any products herein.